1-Line Bidirectional ESD Protection Diode



General description

Low capacitance bidirectional ElectroStatic Discharge (ESD) protection diode in a ultra-small and flat lead SOD323 plastic package designed to protect one signal line from the damage caused by ESD and other transients.

Features and benefits

- Bidirectional ESD protection of one line
- Reverse stand-off voltage: 5.0V Max
- Low leakage current: nA Level
- Response time is typically < 1 ns
- Ultra Low Capacitance 2.5 pF(Typ)
- IEC61000−4−2 Level 4 ESD Protection
- RoHS compliant

Application information

- Computers and peripherals
- Audio and video equipment
- Cellular handsets and accessories
- Local Area Network (LAN) equipment
- Communication systems
- SIM card protection

Ordering information

Device	Package	Packaging
SLESD3LM5.0C	SOD323	3000/Tape & Reel

Schematic & Pin configuration

Simplified outline	Graphic symbol
	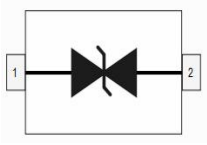

Maximum Ratings (T_{OP} = 25 °C, unless otherwise specified)

Parameter	Symbol	Value	Unit
Peak Pulse Power (tp = 8/20 μ s)	P_{PPM}	30	W
Peak Pulse Current(tp = 8/20 μ s)	I_{PPM}	2.5	A
ESD voltage IEC 61000-4-2 (air discharge)	V_{ESD}	15	kV
ESD voltage IEC 61000-4-2 (contact discharge)	V_{ESD}	8	kV
Maximum lead temperature for soldering during 10s	T_L	260	°C
Storage Temperature Range	T_{stg}	-55 to +150	°C
Operating Temperature Range	T_{OP}	-40 to +125	°C

Electrical Characteristics (T_{OP} = 25 °C, unless otherwise specified)

Parameter	Symbol	Min	Typ	Max	Unit	Condition
Reverse Working Voltage	V_{RWM}	--	--	5.0	V	
Breakdown Voltage	V_{BR}	6.0	--	8.6	V	I_T=1mA
Leakage Current ILeak	I_R	--	--	100	nA	V_{RWM}=5.0V
Clamping Voltage	V_C	--	--	13.0	V	I_{PP}=2A,Tp=8/20μs
Junction Capacitance	C_J	--	2.5	3.5	pF	V_R=0V, f=1MHz

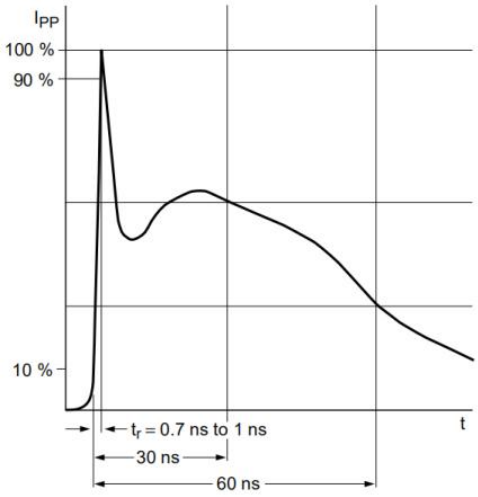

IEC61000−4−2 Waveform

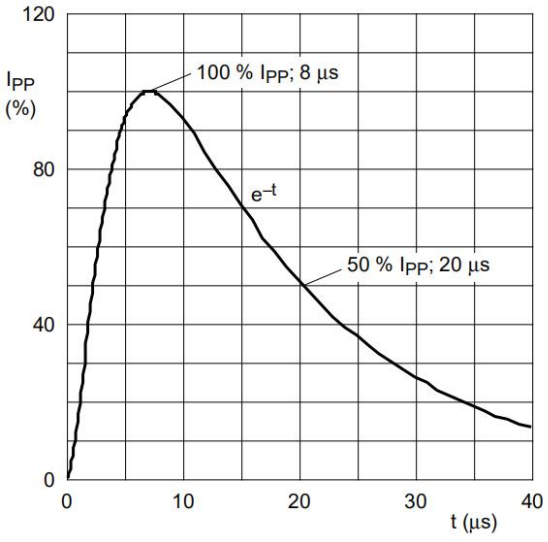

IEC 61000-4-5 Waveform(8/20μs pulse)

Package Outline Dimensions

SOD323

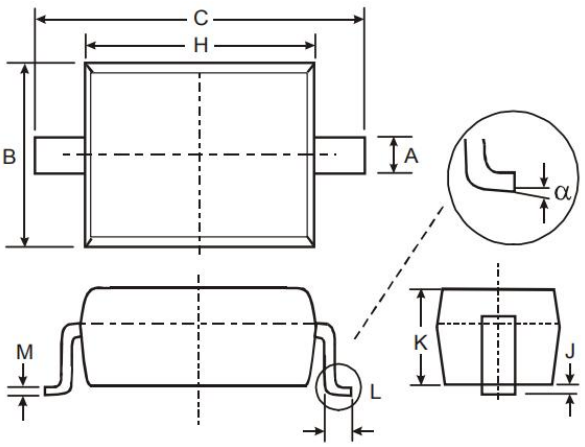

SYMBOL	MILLIMETERS	
	MIN	MAX
A	0.25	0.35
B	1.20	1.40
C	2.40	2.70
H	1.60	1.80
J	0.01	0.15
K	0.70	0.90
L	0.20	0.40
M	0.08	0.15
α	0°	8°

Soldering Footprint (mm)

